FILE NO	

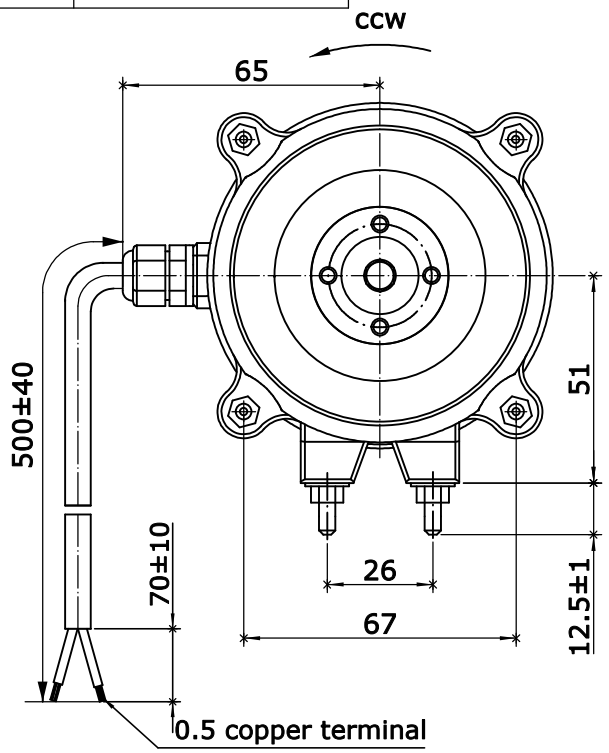

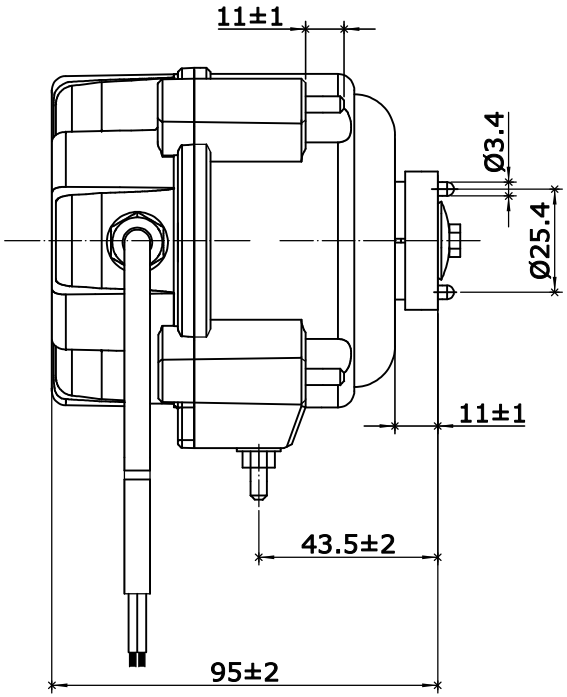

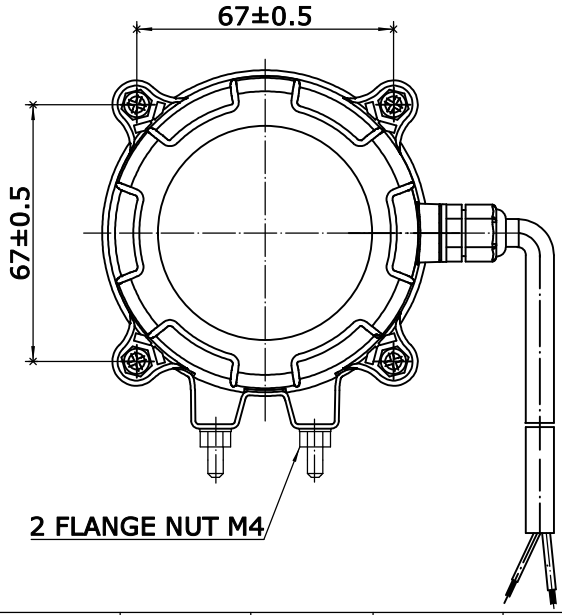

LABEL

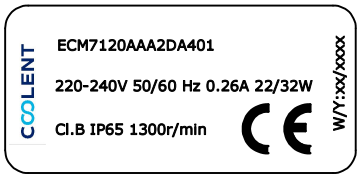

WIRE CONNECT

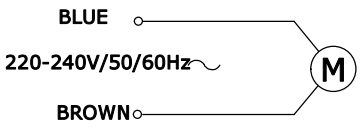

WEIGUANG

Electronically Commutated Motor

Hangzhou Weiguang Electronic CO.,LTD.

SPECIFICATION

MOTOR	Electronically Commutated Motor		
MOTOR TYPE	ECM7120AAA2DA401		
VOLTAGE (V)	220-240		
FREQUENCY (Hz)	50/60		
INPUT POWER (W)	32		
CURRENT (A)	0.26		
SPEED (r/min)	1300		
FAN BLADES	Φ300 / 25° (max)		
ROTATION	CCW (looking towards the shaft)		
AIRFLOW DIRECTION	Sucking or Blowing		
INSULATION CLASS	B		
TEMPERATURE RISE	50K max (with load)		
PROTECTION CLASS	IP 65		
OPERATING TYPE	S1		
MOUNTING TYPE	Horizontal or Vertical		
AMBIENT TEMPERATURE	-30°C~+50°C		
BEARINGS	ball bearings		
ELECTRICAL CONNECTION	2×0.5mm^2 lead wire 500±40mm free length		
HI-POT TEST	3600V 1s		
WEIGHT PER UNIT	0.78kg		
PACKING	40PCS/CTN		

REV.	DESCRIPTION	APPROVED	DATE

	SIGN	DATE
DRN.BY		
CHD.BY		
ENG.BY		
APP.BY		

ECM7120AAA2DA401

SCALE:

SHEET: 1 of