直流变频压缩冷凝机组

DC INVERTER compressor condensing unit

操作指南

Operating Instruction



1 Overview ····· 1

2 Unit performance parameters ····· 2

2.1 Standard of specifications ····· 2

2.2 Refrigeration capacity ····· 2

3 Control board ····· 3

4 Circuit ····· 5

5 Application point ····· 6

5.1 Unit installation ····· 6

5.2 Transportation and Storage ····· 6

5.3 Piping installation and Welding ····· 6

5.4 Leak detection and Vacuuming ····· 7

5.5 Charging refrigerant ····· 8

5.6 Electrical connection ····· 8

5.7 Startup and Halt ····· 9

6 Operation and Test ····· 9

6.1 Conformation information before startup ····· 9

6.2 Unit operation check ····· 9

7 Maintenance and Solutions ····· 9

7.1 Check and Maintenance list ····· 9

7.2 Solution for abnormal situation ····· 10

8 Determining faults ····· 11

1 Overview

The BLDC refrigeration condensing unit user guide will help the technician to understand the principle of BLDC system functions. Including the safety installation, start-up and maintenance.

The performance of BLDC condensing unit has designed based on evaporative temperature from 0 deg to -35deg, suitable for freezer; cool room and display cabinet and all the commercial refrigeration system needs, also including supermarket application. The features of BLDC compressor, to provide high efficiency working performance and running at lower noise level.

The BLDC condensing unit working principle:

- When the refrigeration system on heavy load, such as start up or at summer condition, the compressor will speed up and quickly pull down the temperature.
- Suitable for different applications, can be set up frequency to control the running speed of compressor. Save energy and compressor service life.
- Compressor running frequency between 20-90Hz, suitable for different heat load to maximize the system operating in the high efficiency state.
- The quick frequency control function will guaranty the refrigeration unit running at lowest noise level and reduce the vibration.
- The manual control board can use for set up or adjusting the system operation and also to check the current system operation state.

2 Unit performance parameters

2.1 Standard of specifications

Unit Model		NF163DC-ML
Capacity(hp) R404a		2hp
Range of Frequency (Hz)		20~90
Fan motor power (W)		20~180
Number of fan		1
Fan diameter (mm)		560
Range	Evap.temp.	-30℃~+10℃
	Amb.temp	-25℃~+45℃
Oil	Type	HAF68D1U
	Volume (L)	0.5
Refrigerant		R404A/R407F/R448A/R449A/R455A
Liquid receiver (L)		4.5
Overall dimensions	Width(mm)	1160
	Depth(mm)	490
	Height(mm)	945
Piping	Gas (Inch)	1/2
	Liquid(Inch)	3/8

Test condition: Ambient temp.32℃, Evap.temp-10℃, Suction temp20℃, 50Hz

2.2 Refrigeration capacity

NF163DC-ML R404A

Frequency	20Hz			50Hz			90Hz		
Displacement	1.17m³/h			2.93m³/h			5.28m³/h		
Evap. Temp. Te	Qo(kW)	Pe(kW)	COP	Qo(kW)	Pe(kW)	COP	Qo(kW)	Pe(kW)	COP
-30℃	0.35	0.28	1.14	0.69	0.47	1.47	1.11	0.78	1.42
-25℃	0.38	0.29	1.31	0.85	0.50	1.70	1.39	0.83	1.67
-20℃	0.45	0.30	1.50	1.02	0.52	1.96	1.71	0.89	1.92
-15℃	0.53	0.31	1.71	1.19	0.54	2.20	2.07	0.93	2.03
-10℃	0.60	0.33	1.82	1.35	0.56	2.41	2.46	0.98	2.51
-5℃	0.68	0.35	1.91	1.47	0.58	2.53	2.88	1.03	2.80
-0℃	0.77	0.38	2.03	1.60	0.61	2.62	3.31	1.08	3.06
5℃	0.87	0.41	2.12	1.75	0.64	2.73	3.74	1.14	3.28
10℃	0.98	0.45	2.18	1.91	0.68	2.81	4.15	1.20	3.46

Note:ambient temperature 32℃, Suction temperature 20℃,Cooling capacity & power data ±5%;

3. Manual controllers



- **"Menu":** Menu Key
- **"UP", "DOWN":** Up and Down Selection Keys
- **"OK":** Confirm Key

• After the unit is powered on, the screen displays the current working frequency XX (number) of the compressor, in Hz;
• Use the "UP" and "DOWN" keys to select the current system parameters, press the "OK" key to view:

- **P1:** Suction pressure, the value is in bar after dividing by 10, e.g., 43 represents 4.3 bar
- **P2:** Discharge pressure, the value is in bar after dividing by 10, e.g., 128 represents 12.8 bar
- **C1:** Ambient temperature, in ℃
- **C2:** Discharge temperature, in ℃
- **A:** Power, the value is in W after multiplying by 10 (2HP-5HP), and in W after multiplying by 100 (6HP and above)
- **F:** Fault code

For example, on the main screen, adjust the screen to display P1 using the "UP" and "DOWN" keys, then press "OK" to display the current suction pressure value;
• Press the "Menu" key to return to the main screen, which displays XX (current working frequency);
• Hold down the "Menu" key for 5 seconds to enter the settings menu, the screen displays L1. Use the "UP" and "DOWN" keys to select and modify the values of L1, L2, L3, and L4:

- **L1:** Suction pressure restore value, factory set to 15 (1.5 bar), no need for adjustment if unnecessary;
- **L2:** Pressure Coefficient corresponding to cold storage temperature, see the

table below;

- **L3:** Default factory setting for the highest frequency, no need for adjustment;
- **L4:** Default factory setting for the lowest frequency, no need for adjustment;

Cold storage temperature corresponding to pressure coefficient setting reference table（L2）			
Cold room temp.℃	R22	R404A	R448A/R449A
8	41	52	43
5	36	46	38
0	30	37	30
-5	23	30	23
-10	17	23	17
-18	10	14	10
-25	5	8	4

For example, hold down the "Menu" key for 5 seconds, the screen displays L1, press the "DOWN" key to make the screen display L2, press "OK" to enter. The screen displays the current setting value of L2, use the "UP" and "DOWN" keys to change this value, press "OK" to confirm after setting, the screen displays L2. Press the "Menu" key again to return to the main screen, which now shows the current working frequency.

Fault code

E1: Discharge temperature sensor fault. (Check sensor circuit or replace sensor)
E2: Ambient temperature sensor fault. (Check sensor circuit or replace sensor)
E4: Low pressure alert. (Low pressure reason troubleshooting)
E8: High pressure alert. (High pressure reason troubleshooting)
E16: High discharge temperature alert. (Check reason and troubleshooting)
E32: Compressor fault. (Check reason and troubleshooting)
E64: Communication fault (communication between compressor’s drive board and control board). (Check wiring terminal, communication line and control board

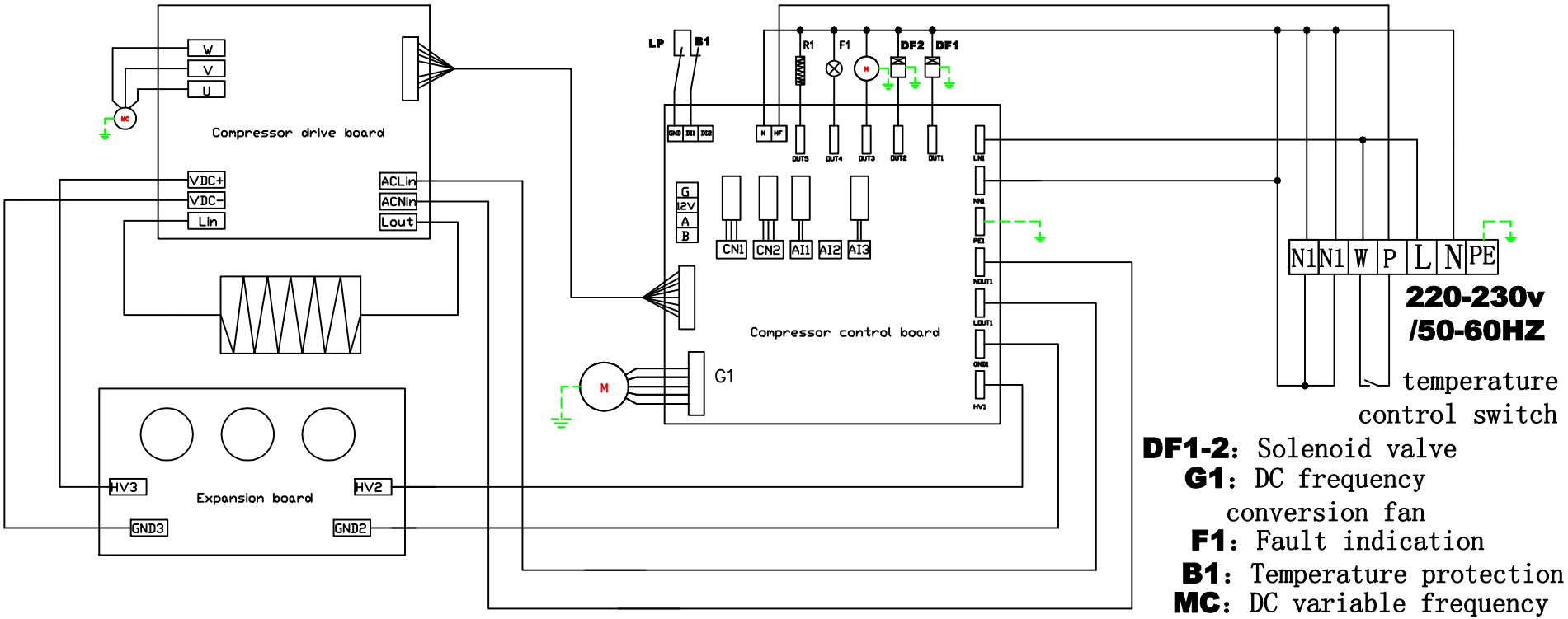
W
V
U
MC
Compressor drive board
VDC+
VDC-
Lin
ACLin
ACNin
Lout
HV3
Expansion board
HV2
GND3
GND2
LP
B1
R1
F1
DF2
DF1
GND
IN1
IN2
N
HF
OUT5
OUT4
OUT3
OUT2
OUT1
LIN1
NIN1
PE1
NOUT1
LOUT1
GND1
HV1
G
12V
A
B
CN1
CN2
AI1
AI2
AI3
Compressor control board
M
G1
N1
N1
W
P
L
N
PE
220-230v
/50-60HZ
temperature
control switch
DF1-2: Solenoid valve
G1: DC frequency
conversion fan
F1: Fault indication
B1: Temperature protection
MC: DC variable frequency
compressor

5 Application point

5.1 Unit installation

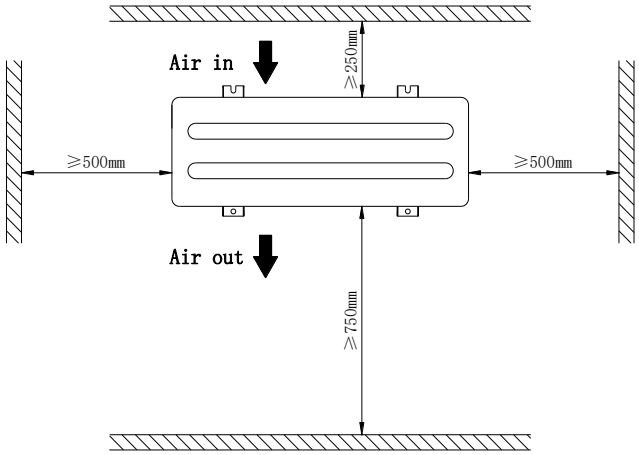

- Read DC INVERTER compressor condensing unit: Operating Instruction before installation.
- Avoid installing in flammable, explosive and heavy dust area.
- Avoid installing in walkway, door and window area.
- Provide enough space for air interchange and unit opening, reference above chart.
- Avoid installing in long time direct sunlight area.
- Install in flattish and solid surface (Slope < 3°).

5.2 Transportation and Storage

- Recommend keep the package intact before installation.
- In the process of transportation, using suitable and safety carrier, avoid crash. Keep equipment vertical, prohibit inversion (Slope≤30°).
- Store equipment in a dry place with good ventilation. Storage temperature should be a range of -35℃ to +60℃.
- Do not explosive packing equipment in raining and corrosive environment.
- Check equipment condition after open packing.

5.3 Piping installation and Welding

- Use national standard cleaning refrigeration fittings. Inner surface should cleaning, without dusty

and water.

• Connect unit as quick as possible when you start piping installation to avoid water and dusty in the air enter into unit.

• The highest of unit installation position not more than 8m above the evaporator.

• Required oil return bend on the vertical pipe line if the unit install position over evaporator higher than 4m, need an oil return bend for every 4m in between.

• Require oil bend in the outlet of evaporator.

• Process the nitrogen when welding the copper to avoiding the oxidation inside the pipe, also wet cloth is.

• The wet cloth is required when welding the sight glass, valves, driver, etc.

• Suction filter as unit accessory, it is recommended that installed on the suction pipe line between the unit and evaporator, which can effectively remove impurities and protect the compressor, and convenient to replace

• The refrigeration oil replenishment quantity is shown in the following figure,

Unit model		**NF163DC-ML**
Oil	Type	HAF68D1U
	charge volume (L)	0.5
Refrigeration oil replenishment (**L/10m**)*		0.1

* Note: The above reference for the amount of frozen oil replenishment is for guidance only, and the actual quantity should be determined based on real construction conditions.

5.4 Leak detection and Vacuuming

• When holding pressure for leak test, high pressure shouldn't more than 18barg and low pressure shouldn't more than 12barg to avoiding damaged pressure controller.

• Leak detection can also use Vacuuming method.

• Prohibited vacuuming by compressor.

• In the process of vacuuming, open all values in the unit and start simultaneously in high and low pressure terminal.

• Vacuum level should under 30Pa, and not evaluate the vacuum level by vacuuming time.

• In the condition of vacuum, unit cannot connect with power or using multimeter to avoid

damaging the equipment.

5.5 Charging refrigerant

- Please confirm the type of refrigerant for the system.
- The quantity of refrigerant charging should be before unit power on. The best charging spot is on high-pressure liquid valve.
- If once charging refrigerant are not enough and need to charging more, start the unit running and slowly charging the refrigerant to the suction valve. (Need to attention when charging liquid state of refrigerant to the system, slowly to open the charging valve, too much liquid to the compressor and will damaged compressor)
- In the process of charging, system may stop due to low pressure, in the case of happening, not allow to bypass the low pressure controller or low pressure protector to manual start the compressor to continue charging refrigerant.
- If the unit is applied to long pipe line aluminum row evaporator, additional compressor refrigeration oil is required. The replenishing amount should be greater than one-third of the refrigerant charge minus the compressor's original refrigerating oil charge.

5.6 Electrical connection

- Electrical connection should be taken by professional technician who has license for electrical working. It need follow up the requirement of electric wiring diagram.
- Electric connection should strictly according to electrical standard to use different color of the electrical wiring.
- In the process of connection, power should be cut off.
- All electric parts should be compliant with local standard and unit requirement.
- Ensure power supply stable and adapt to equipment specification (Voltage ±10%, Frequency ±2.5Hz).
- Ensure the unit is ground connection, ensure compressor’s power supply phase is correct.
- To ensure safety, all wire connection should not have exposed metal and all wire cannot touch any high temperature surface (e.g. compressor body, discharge pipe or heaters).
- After finish connection, control switch and resistance in the contactor should be test

(Requirement: resistance should more than 2MΩ).

5.7 Startup and Halt

• For first power on or normal shut down and restart, unit has a 180 seconds delay. After the delay, the compressor and fan will work normally (compressor in soft mode).

• Normal startup has 3 min delay (mini off 3 min before next start).

• Compressor and cooling fan will stop when reached the safety pressure settings or reached the temperature settings.

6 Operation and test

6.1 Conformation information before startup

• Confirm all electric line be fixed and strict to local electrical requirement.

• All service valves in the opening position.

• Confirm refrigerant has fully charged.

• Check the power voltage. It should be in ±10% difference compared with rated voltage.

• Confirm all safety protectors connection are correct and in working condition. Not allow to manually start the system.

6.2 Unit operation check

• Check fan rotate direction, wind should from condenser toward to the fan.

• In the process of operation, unit should not have any abnormal noise and vibration.

• Check electric current and voltage, it should be in reasonable range.

• Check system operation in normal pressure range (high and low).

7 Maintenance and Solutions

7.1 Check and maintenance list

- Check unit operation pressure and temperature.
- Check system leaking if have no enough refrigerant.
- Check electrical current normal or not.
- Check the sight glass to judge the level of refrigerant and dryness in the system.
- Check protective device and control device do have abnormal action or not.
- Check compressor and fan have abnormal noise and vibration or not.
- Check electric wire do have insulation aging or over heating or not. It is still connected firmly.
- Check condenser fins with dusty or not. Cleaning up if needed.
- Keep unit clean and component in the unit have no rust and oxidation.

7.2 Solution for abnormal situation

- In case of electrical faulty, cut off the power first.
- Do not touch the unit without permission and service technician have to be licensed.
- Refrigerant need to reclaimed use reclaims machine, not allow to release refrigerant to the air.
- When unit to open for service or change the components, drier need to replace at same time.
- When the compressor, condenser etc main component needs to replace, system have to clean up with nitrogen and also add a drier on the suction line is necessary.

8 Determining faults

	Faults	Fault cause	Solution
1	**Compressor not start**	Power problem	Check power
		Fuse burnt or switch tripping	Replace fuse or switch
		Unit stopped under protection	Find out the reason and reset protector
		Compressor overcurrent	Find out the reason and solve
		High discharge pressure	Relevant 2nd solution
		Lower suction pressure	Relevant 3rd solution
		Temperature controller break	Adjust it or replace
		Compressor motor burnt	Find out the reason and replace compressor
		Compressor mechanical fault	Find out the reason and replace compressor
2	**High discharge pressure**	Condenser fan running problem	Repair or replace it
		Condenser blocking	Clean condenser
		High ambient temperature or poor ventilation	Improve environment and ventilation
		Refrigerant overcharged	Reduce refrigerant
3	**Lower suction pressure**	Evaporator fan running problem	Repair or replace it
		Expansion valve or filter blocking	Clean expansion valve, clean or replace filter
		Refrigerant less charge	Filling more refrigerant
		Unit leaking	Find it and repair
4	**Compressor body frosting**	Expansion valve open too much	Turn down the expansion valve
		Wrong orifice	Change orifice
		Evaporator blocking	Clean evaporator
		Evaporator fan running problem	Repair or replace it
5	**Compressor with abnormal noise**	Compressor mechanical fault	Find out the reason and replace compressor
		High discharge pressure	Relevant 2nd solution
		Much or less compressor oil	Filling oil correct
		Much liquid return	Check system and eliminate liquid
		Unit or compressor fixation loosening	Fix it

6	**Too much vibration of unit**	Piping line vibration	Reduce the vibration
		Condenser fan broken	Replace it
		Unit not in flat foundation	Move in flat foundation
		Compressor mechanical fault	Find out the reason and replace compressor
7	**Compressor launch frequency**	Set low temperature difference for temperature controller	Reset
		Electric control fault	Find out the reason and solve
		Lower suction pressure	Relevant 3rd solution
		High discharge pressure	Relevant 2nd solution
8	**Poor refrigeration or no refrigeration**	Refrigerant less charge	Filling more refrigerant
		Unit leaking	Find it and repair
		Expansion valve or filter blocking	Clean expansion valve, clean or replace filter
		Unit stopped under protection	Find out the reason and reset protector
		High discharge pressure	Relevant 2nd solution
		Condenser blocking	Clean condenser
		Condenser fan running problem	Repair or replace it
		Evaporator blocking	Clean evaporator
		Evaporator fan running problem	Repair or exchange it
		Compressor motor burnt	Find out the reason and replace compressor
		Compressor mechanical fault	Find out the reason and replace compressor
		High condensing temperature	Improve condenser ventilate

Note: In case of failure, please contact the supplier in time for professional guidance.

Without notice if any details have changed.